LionTec

Datasheet

Lithium-Ion-Battery

BIB-0360105P

36 V (37 V) / 10.4 Ah

Lithium-Ion-Battery with keys.

Technical Data:

Nominal voltage:	36 V (37 V)
Rated capacity C1:	10.4 Ah
Standard charge:	2 A CC (constant current) until 42 V, then CV (constant voltage) 42 V until I = 0,4 A
Maximum discharge current:	20 A
Discharge cut-off voltage:	30 V
Operating temperature:	Charging : 0 - 45°C Discharging : -20 - 60°C
Storage temperature:	-20 - 45°C
Weight:	3.5 kg

ACCU-24
BATTERIEN & SYSTEME GmbH
Untergasse 5 - 63688 Gedern - Tel. +49 6045 952520 - www.accu-24.de

Dimensions:

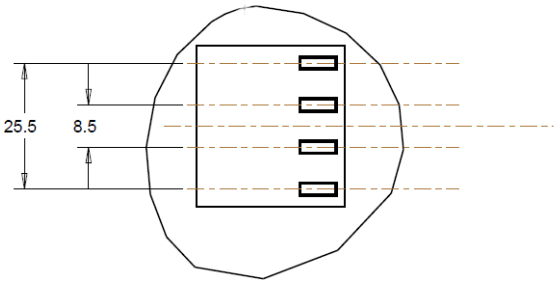
25.5
8.5

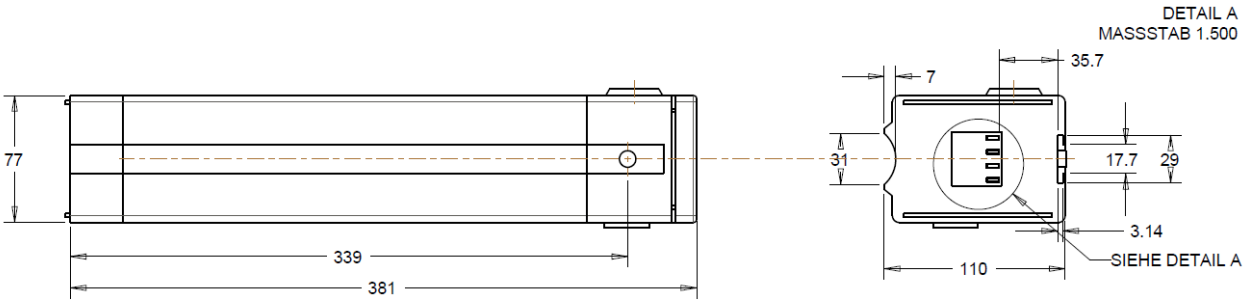
DETAIL A
MASSSTAB 1.500
77
339
381
7
35.7
31
17.7
29
3.14
110
SIEHE DETAIL A